This manual should be considered a permanent part of the vehicle and should remain with the vehicle when it is resold.

This publication includes the latest production information available before printing. Honda Motor Co., Ltd. reserves the right to make changes at any time without notice and without incurring any obligation.

No part of this publication may be reproduced without written permission.

The vehicle pictured in this owner's manual may not match your actual vehicle.

© 2020 Honda Motor Co., Ltd.

Welcome

Congratulations on your purchase of a new Honda vehicle. Your selection of a Honda makes you part of a worldwide family of satisfied customers who appreciate Honda's reputation for building quality into every product.

To ensure your safety and riding pleasure:

- Read this owner's manual carefully.
- Follow all recommendations and procedures contained in this manual.
- Pay close attention to safety messages contained in this manual and on the vehicle.
- The following code in this manual indicates the country.

Country Code

Code	Country
CBF125M	
ED	European direct sales

A Few Words About Safety

Your safety, and the safety of others, is very important. Operating this vehicle safely is an important responsibility.
To help you make informed decisions about safety, we have provided operating procedures and other information on safety labels and in this manual. This information alerts you to potential hazards that could hurt you or others.
Of course, it is not practical or possible to warn you about all hazards associated with operating or maintaining a vehicle. You must use your own good judgement.

You will find important safety information in a variety of forms, including:

- Safety labels on the vehicle
- Safety Messages preceded by a safety alert symbol ⚠ and one of three signal words: DANGER, WARNING, or CAUTION. These signal words mean:

⚠DANGER

You WILL be KILLED or SERIOUSLY HURT if you don't follow instructions.

⚠WARNING

You CAN be KILLED or SERIOUSLY HURT if you don't follow instructions.

⚠CAUTION

You CAN be HURT if you don't follow instructions.

Other important information is provided under the following titles:

NOTICE Information to help you avoid damage to your vehicle, other property, or the environment.

Contents

Vehicle Safety P. 2

Operation Guide P. 16

Maintenance P. 43

Troubleshooting P. 76

Information P. 85

Specifications P. 97

Index P. 100

Vehicle Safety

This section contains important information for safe riding of your vehicle.
Please read this section carefully.

Safety Guidelines ..... P. 3
Image Labels ..... P. 6
Safety Precautions ..... P. 10
Riding Precautions ..... P. 11
Accessories & Modifications ..... P. 14
Loading ..... P. 15

Safety Guidelines

Follow these guidelines to enhance your safety:

- Perform all routine and regular inspections specified in this manual.
- Stop the engine and keep sparks and flame away before filling the fuel tank.
- Do not run the engine in enclosed or partly enclosed areas. Carbon monoxide in exhaust gases is toxic and can kill you.

Always Wear a Helmet

It's a proven fact: helmets and protective apparel significantly reduce the number and severity of head and other injuries. So always wear an approved helmet and protective apparel. ➡ P. 10

Before Riding

Make sure that you are physically fit, mentally focused and free of alcohol and drugs. Check that you and your passenger are both wearing an approved helmet and protective apparel.

Instruct your passenger on holding onto the grab rail or your waist, leaning with you in turns, and keeping their feet on the footpegs, even when the vehicle is stopped.

Take Time to Learn & Practice

Even if you have ridden other vehicles, practice riding in a safe area to become familiar with how this vehicle works and handles, and to become accustomed to the vehicle's size and weight.

Ride Defensively

Always pay attention to other vehicles around you, and do not assume that other drivers see you. Be prepared to stop quickly or perform an evasive maneuver.

Continued

Make Yourself Easy to See

Make yourself more visible, especially at night, by wearing bright reflective clothing, positioning yourself so other drivers can see you, signaling before turning or changing lanes, and using your horn when necessary.

Ride within Your Limits

Never ride beyond your personal abilities or faster than conditions warrant. Fatigue and inattention can impair your ability to use good judgement and ride safely.

Don't Drink or Use Drugs and Ride

Alcohol or drugs and riding don't mix. Even one alcoholic drink can reduce your ability to respond to changing conditions, and your reaction time gets worse with every additional drink. The same is true for drug use. Don't drink or use and ride, and don't let your friends do it either.

Keep Your Honda in Safe Condition

It's important to keep your vehicle properly maintained and in safe riding condition. Inspect your vehicle before every ride and perform all recommended maintenance. Never exceed load limits (➡ P. 15), and do not modify your vehicle or install accessories that would make your vehicle unsafe (➡ P. 14).

If You are Involved in a Crash

Personal safety is your first priority. If you or anyone else has been injured, take time to assess the severity of the injuries and whether it is safe to continue riding. Call for emergency assistance if needed. Also follow applicable laws and regulations if another person or vehicle is involved in the crash.

If you decide to continue riding, first turn the ignition switch to the ○ (Off) position, and evaluate the condition of your vehicle. Inspect for fluid leaks, check the tightness of critical nuts and bolts, and check the handlebar, control levers, brakes, and wheels. Ride slowly and cautiously.
Your vehicle may have suffered damage that is not immediately apparent. Have your vehicle thoroughly checked at a qualified service facility as soon as possible.

Carbon Monoxide Hazard

Exhaust contains poisonous carbon monoxide, a colourless, odorless gas. Breathing carbon monoxide can cause loss of consciousness and may lead to death.

If you run the engine in confined or even partly enclosed area, the air you breathe could contain a dangerous amount of carbon monoxide.

Never run your vehicle inside a garage or other enclosure.

⚠WARNING

Running the engine of your vehicle while in an enclosed or even partially enclosed area can cause a rapid build-up of toxic carbon monoxide gas.

Breathing this colourless, odorless gas can quickly cause unconsciousness and lead to death.

Only run your vehicle's engine when it is located in a well ventilated area outdoors.

Image Labels

The following pages describe the label meanings. Some labels warn you of potential hazards that could cause serious injury. Others provide important safety information. Read this information carefully and don't remove the labels.

If a label comes off or becomes hard to read, contact your dealer for a replacement.

There is a specific symbol on each label. The meanings of each symbol and label are as follows.

Read instructions contained in Owner's Manual carefully.

Read instructions contained in Shop Manual carefully. In the interest of safety, take the vehicle to be serviced only by your dealer.

DANGER (with RED background)
You WILL be KILLED or SERIOUSLY HURT if you don't follow instructions.
WARNING (with ORANGE background)
You CAN be KILLED or SERIOUSLY HURT if you don't follow instructions.
CAUTION (with YELLOW background)
You CAN be HURT if you don't follow instructions.

BATTERY LABEL
DANGER

- Keep flame and spark away from the battery. Battery produce explosive gas that can cause explosion.
- Wear the eye protection and rubber gloves when handling the battery, or you can get burned or lose your eyesight by the battery electrolyte.
- Do not allow children and other people to touch a battery unless they understand proper handling and hazards of the battery very well.
- Handle the battery electrolyte with extreme care as it contains dilute sulfuric acid. Contact with your skin or eyes can burn you or cause loss of your eyesight.
- Read this manual carefully and understand it before handling the battery. Neglect of the instructions can cause personal injury and damage to the vehicle.
- Do not use a battery with the electrolyte at or below the lower level mark. It can explode causing serious injury.

Continued

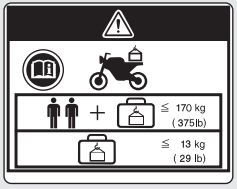

ACCESSORIES AND LOADING WARNING LABEL
WARNING

ACCESSORIES AND LOADING

- The safety stability and handling of this vehicle may be affected by the addition of accessories and luggage.
- Read carefully the instructions contained in user's manual and installation guide before installing any accessory.
- The total weight of accessories and luggage added to rider's and passenger's weight should not exceed **170 kg (375 lb)**, which is the maximum weight capacity.
- The luggage weight must not exceed **13 kg (29 lb)** under any circumstances.
- The fitting of large fork-mounted or large handlebar mounted fairing is not recommended.

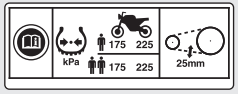

TYRE INFORMATION & DRIVE CHAIN LABEL

Cold tyre pressure:

[Driver only]

Front **175 kPa (1.75 kgf/cm², 25 psi)**

Rear **225 kPa (2.25 kgf/cm², 33 psi)**

[Driver and passenger]

Front **175 kPa (1.75 kgf/cm², 25 psi)**

Rear **225 kPa (2.25 kgf/cm², 33 psi)**

Keep chain adjusted and lubricated.

Freeplay **20 - 30 mm (0.8 - 1.2 in)**

SAFETY REMINDER LABEL

For your protection, always wear helmet, protective apparel.

FUEL LABEL

Unleaded petrol only

ETHANOL up to 10 % by volume

Safety Precautions

- Ride cautiously and keep your hands on the handlebar and feet on the footpegs.
- Keep passenger's hands onto the grab rail or your waist, passenger's feet on the footpegs while riding.
- Always consider the safety of your passenger, as well as other drivers and riders.

Protective Apparel

Make sure that you and any passenger are wearing an approved helmet, eye protection, and high-visibility protective clothing. Avoid wearing loose clothes that could get caught on any part of the vehicle. Ride defensively in response to weather and road conditions.

Helmet

Safety-standard certified, high-visibility, correct size for your head

- Must fit comfortably but securely, with the chin strap fastened.
- Face shield with unobstructed field of vision or other approved eye protection

⚠WARNING

Not wearing a helmet increases the chance of serious injury or death in a crash.

Make sure that you and any passenger always wear an approved helmet and protective apparel.

Gloves

Full-finger leather gloves with high abrasion resistance

Boots or Riding Shoes

Sturdy boots with non-slip soles and ankle protection

Jacket and Trousers

Protective, highly visible, long-sleeved jacket and durable trousers for riding (or a protective suit)

Riding Precautions

Running-in Period

During the first 500 km (300 miles) of running, follow these guidelines to ensure your vehicle's future reliability and performance.

- Avoid full-throttle starts and rapid acceleration.
- Avoid hard braking and rapid down-shifts.
- Ride conservatively.

Brakes

Observe the following guidelines:

- Avoid excessively hard braking and downshifting.
  - ▶ Sudden braking can reduce the vehicle's stability.
  - ▶ Where possible, reduce speed before turning; otherwise you risk sliding out.
- Exercise caution on low traction surfaces.
  - ▶ The tyres slip more easily on such surfaces and braking distances are longer.
- Avoid continuous braking.
  - ▶ Repeated braking, such as when descending long, steep slopes can seriously overheat the brakes, reducing their effectiveness. Use engine braking with intermittent use of the brakes to reduce speed.
- For full braking effectiveness, operate both the front and rear brakes together.

Combi Brake

Your vehicle is equipped with a brake system that distributes the braking force between the front and rear brakes.
The distribution of the braking force applied to the front and rear brakes when operating the lever only and when operating the pedal only is different.

Continued

For full braking effectiveness, operate both the front and rear brakes together.

Engine Braking

Engine braking helps slow your vehicle down when you release the throttle. For further slowing action, downshift to a lower gear. Use engine braking with intermittent use of the brakes to reduce speed when descending long, steep slopes.

Wet or Rainy Conditions

Road surfaces are slippery when wet, and wet brakes further reduce braking efficiency. Exercise extra caution when braking in wet conditions.
If the brakes get wet, apply the brakes while riding at low speed to help them dry.

Parking

- Park on a firm, level surface.
- If you must park on a slight incline or loose surface, park so that the vehicle cannot move or fall over.
- Make sure that high-temperature parts cannot come into contact with flammable materials.
- Do not touch the engine, muffler, brakes and other high-temperature parts until they cool down.
- To reduce the likelihood of theft, always lock the handlebar and remove the key when leaving the vehicle unattended.
  Use of an anti-theft device is also recommended.

Parking with the Side Stand or Centre Stand

1. Stop the engine.
2. **Using the side stand**
   Push the side stand down.
   Slowly lean the vehicle to the left until its weight rests on the side stand.
   Using the centre stand
   To lower the centre stand, stand on the left side of the vehicle.
   Press down on the tip of the centre stand with your right foot and, simultaneously, pull up and back.

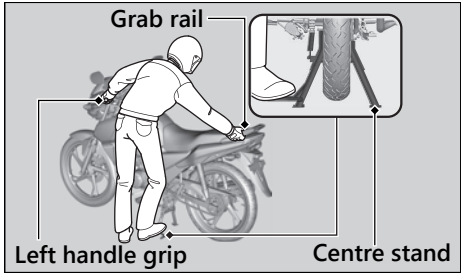

3. Turn the handlebar fully to the left.
   ▶ Turning the handlebar to the right reduces stability and may cause the vehicle to fall.
4. Turn the ignition switch to the (Lock) position and remove the key. ➔ P. 36

Refuelling and Fuel Guidelines

Follow these guidelines to protect the engine, fuel system and catalytic converter:

- Use only unleaded petrol.
- Use recommended octane number. Using lower octane petrol will result in decreased engine performance.
- Do not use fuels containing a high concentration of alcohol. ➔ P. 95
- Do not use stale or contaminated petrol or an oil/petrol mixture.
- Avoid getting dirt or water in the fuel tank.

Accessories & Modifications

We strongly advise that you do not add any accessories that were not specifically designed for your vehicle by Honda or make modifications to your vehicle from its original design. Doing so can make it unsafe. Modifying your vehicle may also void your warranty and make your vehicle illegal to operate on public roads. Before deciding to install accessories on your vehicle be certain the modification is safe and legal.

⚠WARNING

Improper accessories or modifications can cause a crash in which you can be seriously hurt or killed.

Follow all instructions in this owner's manual regarding accessories and modifications.

Do not pull a trailer with, or attach a sidecar to, your vehicle. Your vehicle was not designed for these attachments, and their use can seriously impair your vehicle's handling.

Loading

- Carrying extra weight affects your vehicle's handling, braking and stability.
  Always ride at a safe speed for the load you are carrying.
- Avoid carrying an excessive load and keep within specified load limits.
  Maximum weight capacity/Maximum luggage weight P. 97
- Tie all luggage securely, evenly balanced and close to the centre of the vehicle.
- Do not place objects near the lights or the muffler.

⚠WARNING

Overloading or improper loading can cause a crash and you can be seriously hurt or killed.

Follow all load limits and other loading guidelines in this manual.

Basic Operation Flow

Pre-ride Inspection P.48

Carefully inspect your vehicle to make sure that it is safe to ride.

How to use basic features.

- Instruments P.20
- Indicators P.32
- Switches P.34
- Steering Lock P.36

Starting the Engine P.37

Start and warm the engine.
Avoid revving the engine.

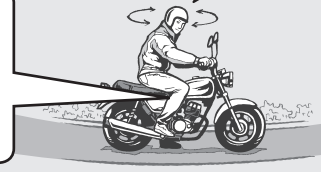

Starting the Vehicle

Before pulling away, indicate your direction with the turn signal switch, and check for oncoming traffic.

Shift Change P.39

Acceleration

Apply throttle gradually.
Obey the speed limit.

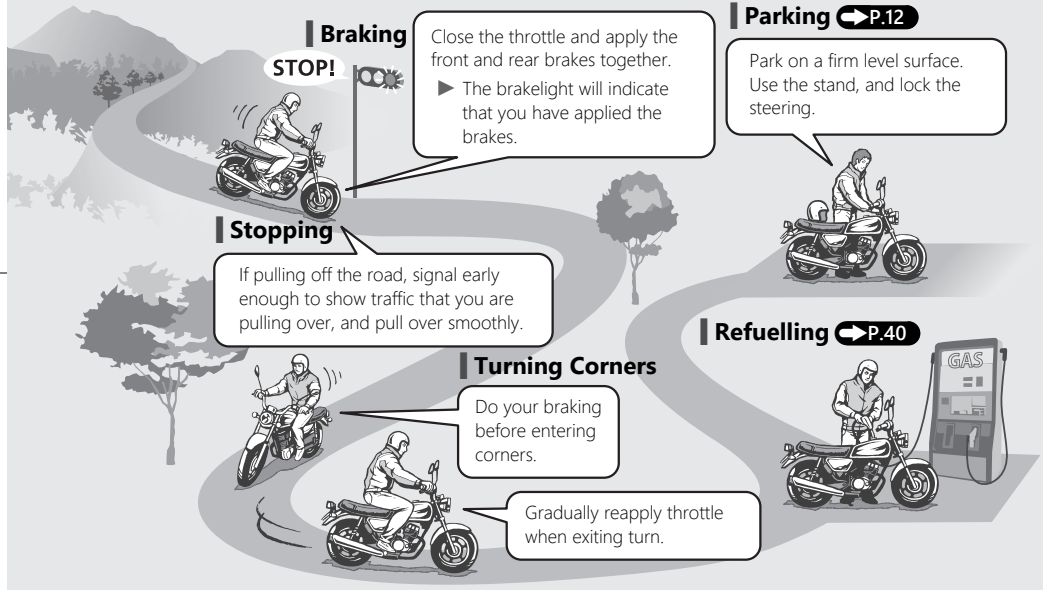
Braking
STOP!
Close the throttle and apply the front and rear brakes together.
▶ The brakelight will indicate that you have applied the brakes.
Parking P.12
Park on a firm level surface. Use the stand, and lock the steering.
Stopping
If pulling off the road, signal early enough to show traffic that you are pulling over, and pull over smoothly.
Refuelling P.40
GAS
Turning Corners
Do your braking before entering corners.
Gradually reapply throttle when exiting turn.

Parts Location

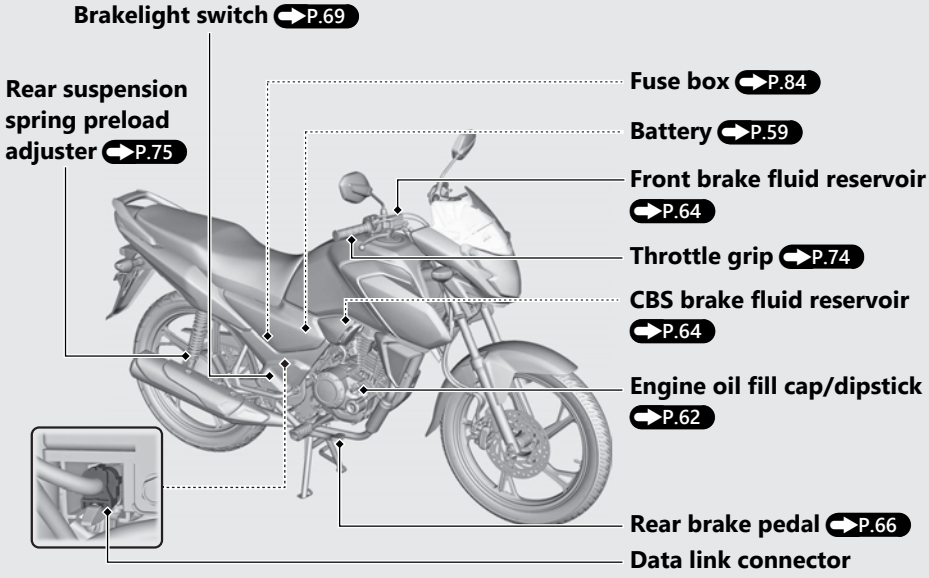

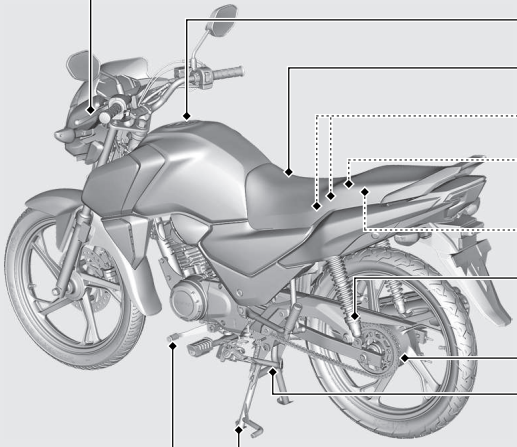

Clutch lever P.72

Fuel fill cap P.40

Seat P.60

Helmet holder P.42

Document bag P.41

Tool kit P.41

Rear suspension spring preload adjuster P.75

Drive chain P.71

Side stand P.70

Centre stand P.13

Shift lever P.39

Instruments

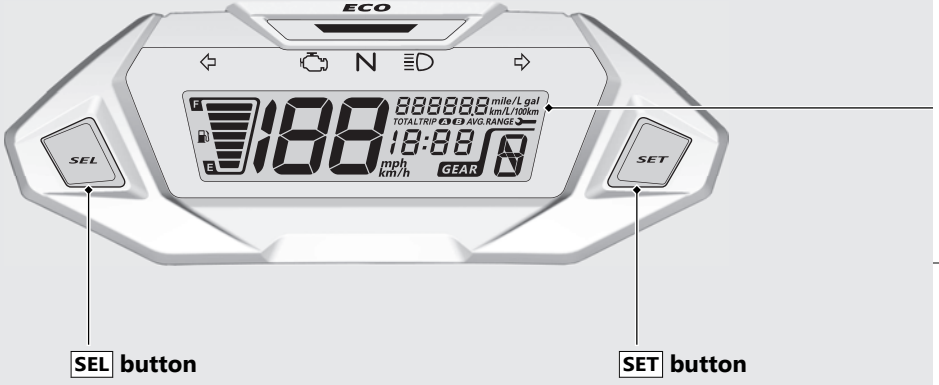

Display Check

When the ignition switch is turned to the ▌(On) position, initial animation will show. If any part of these displays does not come on when it should, have your dealer check for problems.

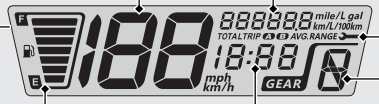

Speedometer

Odometer [TOTAL], Tripmeter [TRIP A/B], Current fuel mileage, Average fuel mileage [A AVG], Available driving distance [RANGE] P.22

SERVICE DUE indicator P.25

Gear position indicator

The gear position is shown in the gear position indicator.

Clock (12-hour display)

To set the clock: P.29

Fuel gauge

Remaining fuel when only 1st (E) segment starts flashing: approximately 0.8 L (0.2 US gal, 0.18 Imp gal)

If the fuel gauge indicator flashes in a repeat pattern or turns off: P.79

NOTICE

You should refuel when the reading approaches the E (1st) segment. Running out of fuel can cause the engine to misfire, damaging the catalytic converter.

Continued

Instruments *(Continued)*

Odometer [TOTAL], Tripmeter [TRIP A/B], Current fuel mileage, Average fuel mileage [A AVG], Available driving distance [RANGE]

SEL button selects between the odometer, tripmeter A, tripmeter B, current fuel mileage, average fuel mileage and available driving distance.

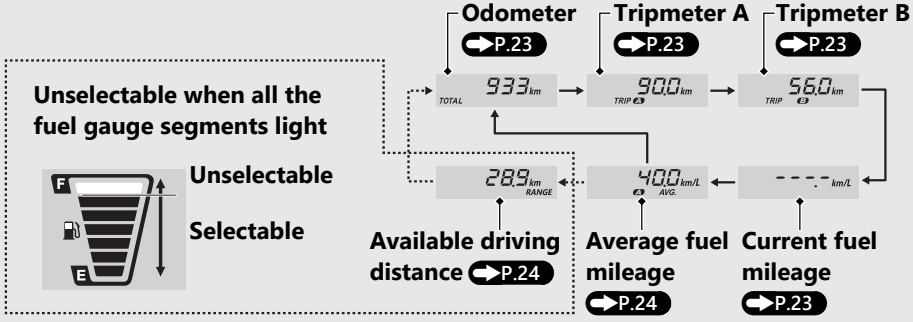

Odometer [TOTAL]

Total distance ridden.
When "------" is displayed, go to your dealer for service.

Tripmeter [TRIP A/B]

Distance ridden since tripmeter was reset.
When "----.-" is displayed, go to your dealer for service.

To reset the tripmeter: P.26

Current fuel mileage

Displays the current instant fuel mileage.
Display range: 0.0 to 99.9 L/100km (km/L or mile/L) or 0.0 to 299.9 mile/gal

- More than 99.9 L/100km (km/L or mile/L): "99.9" is displayed.
- More than 299.9 mile/gal: "299.9" is displayed.
- If your speed is less than about 5 km/h (3 mph) or immediately after ignition switch is turned to (On), "--.-" (L/100km, km/L or mile/L) or "---.-"(mile/gal) is displayed.

When "--.-" (L/100km, km/L or mile/L) or "---.-"(mile/gal) is displayed except for the above-mentioned cases, go to your dealer for service.

Continued

Instruments *(Continued)*

Average fuel mileage [A AVG]

Displays the average fuel mileage since tripmeter A was reset.
The average fuel mileage will be based on the tripmeter A.
Display range: 0.0 to 99.9 L/100km (km/L or mile/L) or 0.0 to 299.9 mile/gal

- More than 99.9 L/100km (km/L or mile/L): "99.9" is displayed.
- More than 299.9 mile/gal: "299.9" is displayed.
- When the tripmeter A is reset: "--.-" (L/100km, km/L or mile/L) or "---.-"(mile/gal) is displayed.

When "--.-" (L/100km, km/L or mile/L) or "---.-"(mile/gal) is displayed except for the above-mentioned case, go to your dealer for service.

To reset the average fuel mileage:
➡P.26

Available driving distance [RANGE]

Displays the estimated distance you can travel on remaining fuel.
It is unselectable when all the fuel gauge segments light.
Display range: 999 to 5 km or 999 to 3 mile

- Above 999 km (mile): "999" is displayed.
- Less than 5 km (3 mile) or the remaining fuel amount is less than 0.1 L or only 1st (E) segment of fuel gauge flashing: "---" is displayed.

The indicated available driving distance is calculated based on the driving conditions, and the indicated figure may not always be the actual available distance.
For a while after resetting the tripmeter A: "---" is displayed.
When "---" is displayed except for the above-mentioned cases, go to your dealer for service.

To reset the available driving distance:
➡P.26

SERVICE DUE indicator

It turns on when the running distance reaches about 1,000 km (621 miles) for the first time and every 6,000 km (3,726 miles) after resetting the indicator.
It indicates that your vehicle has reached the specified distance for service.
When it turned on, go to your dealer for service.
After vehicle is serviced, be sure to reset the indicator.

To reset the SERVICE DUE indicator

Press and hold the **SET** switch while turning the ignition switch to the ▌(On) position, and keep holding the **SET** switch for more than 3 seconds.

- ▶ The indicator does not go off until it is reset.
- ▶ If your vehicle is serviced before the SERVICE DUE indicator comes on, be sure to reset the SERVICE DUE indicator after vehicle is serviced. When resetting the indicator during no indication, the indicator will appear for about 2 seconds, then disappear.

Continued

Instruments *(Continued)*

To reset the tripmeter [TRIP A/B], average fuel mileage [A AVG] and available driving distance [RANGE]

To reset tripmeter A, average fuel mileage and available driving distance together, press and hold **SET** button with tripmeter A displayed.

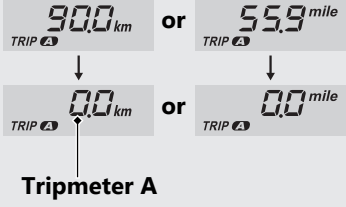

To reset tripmeter B, press and hold **SET** button with tripmeter B displayed.

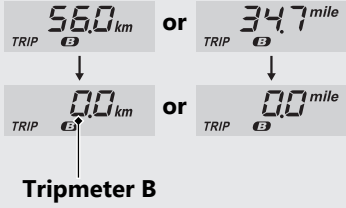

Display Setting

Following items can be changed sequentially.

- Activate or deactivate the ECO indicator
- Clock setting
- Changing of speed and mileage unit
- Changing of fuel mileage meter unit

If the buttons are not pressed for about 30 seconds, the control is automatically switched from the setting mode to the ordinary display.
If the buttons are not pressed for about 30 seconds, items in the process of being set will be discarded and only items that were set and finalized will be applied. Only if the ignition switch is turned to the ○ (Off) position, items in the process of being set and those that are finalized will be applied.

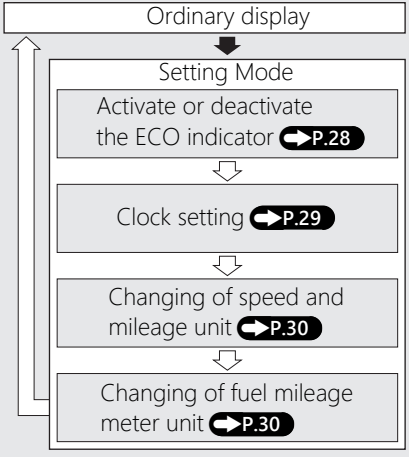

➡ Press and hold SEL and SET buttons
⇨ Press the SET button

Continued

Instruments *(Continued)*

1 Activate or deactivate the ECO indicator:

1. Turn the ignition switch to the ▌(On) position.
2. With odometer [TOTAL] displayed, press and hold the **SEL** and **SET** button until ECO indicator starts flashing.
3. Press **SEL** button to select "ON" (activate) or "OFF" (deactivate).

4. Press **SET** button. The ECO indicator is set, and then the display moves to the clock setting.

2 Clock setting:

① Press **SEL** button until the desired hour is displayed.

▶ Press and hold **SEL** button to advance the hour quickly.

② Press **SET** button. The minute digits start flashing.

③ Press **SEL** button until the desired minute is displayed.

▶ Press and hold **SEL** button to advance the minute quickly.

④ Press **SET** button. The clock is set, and then the display moves to the changing of speed and mileage unit.

Continued

Instruments *(Continued)*

3 Changing of speed and mileage unit:

❶ Press the **SEL** button to select either "km/h" and "km" or "mph" and "mile".

❷ Press the **SET** button. The speed and mileage unit is set, and then the display moves to the changing of fuel mileage meter unit.

4 Changing of fuel mileage meter unit:

① When the "km/h" for speed and "km" for mileage are selected

Press **SEL** button to select "L/100km" or "km/L".

When the "mph" for speed and "mile" for mileage are selected

Press **SEL** button to select "mile/L" or "mile/gal".

② Press **SET** button. The fuel mileage meter unit is set, and then the display moves to the ordinary display.

Indicators

If one of these indicators does not come on when it should, have your dealer check for problems.

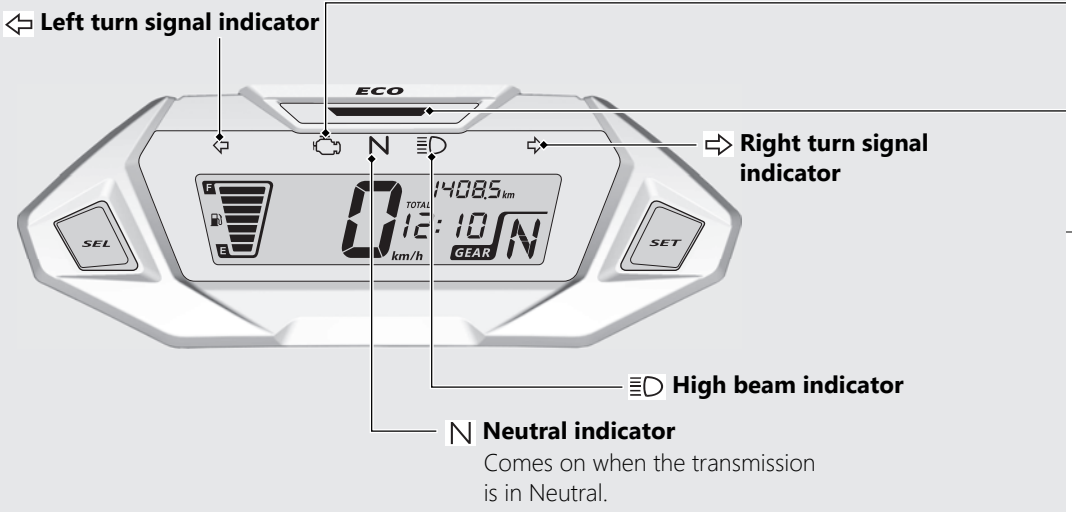

PGM-FI (Programmed Fuel Injection) malfunction indicator lamp (MIL)

Comes on briefly when the ignition switch is turned to the ▌(On) position.

If it comes on while engine is running: P.78

ECO indicator

When fuel consumption improves the ECO indicator will come on.

▶ When the vehicle comes to a stop, the ECO indicator will turn off.

Activate or deactivate the ECO indicator: P.28

Switches

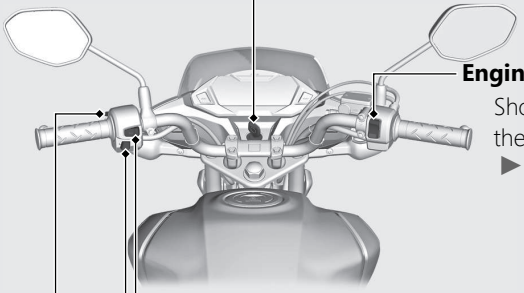

Engine stop switch/ Start button

Should normally remain in the (Run) position.

▶ In an emergency, switch to the (Stop) position (the starter motor will not operate) to stop the engine.

Horn button

Turn signal switch

▶ Pressing the switch turns the turn signal off.

Headlight dimmer/Passing light control switch

- : High beam
- : Low beam
- **PASS** : Flashes the high beam headlight.

⏻ Ignition switch

Switches the electrical system on/off, locks the steering.

▶ Key can be removed when in the ○ (Off) or 🔒 (Lock) position.

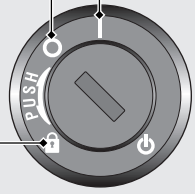

| (On)
Turns electrical system on for starting/riding.

○ (Off)
Turns engine off.

🔒 (Lock)
Lock steering.

Continued

Switches *(Continued)*

Steering Lock

Lock the steering when parking to help prevent theft.
A U-shaped wheel lock or similar device is also recommended.

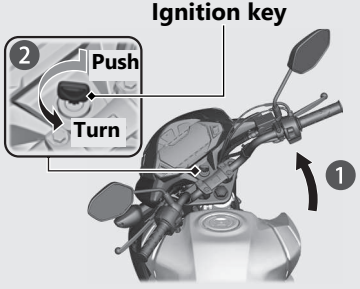

Locking

1. Turn the handlebar all the way to the left or right.
2. Push the key down, and turn the ignition switch to the (Lock) position.
   ► Jiggle the handlebars if the lock is difficult to engage.
3. Remove the key.

Unlocking

Insert the key, push it in, and turn the ignition switch to the (Off) position.

Starting the Engine

Start your engine using the following procedure, regardless of whether the engine is cold or warm.

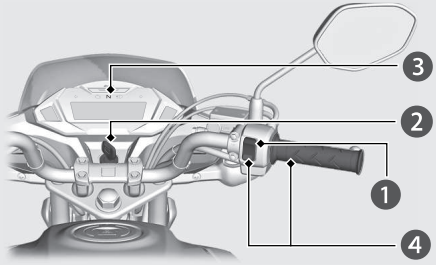

NOTICE

- If the engine does not start within 5 seconds, turn the ignition switch to the ○ (Off) position and wait 10 seconds before trying to start the engine again to recover battery voltage.
- Extended fast idling and revving the engine can damage the engine, and the exhaust system.

Consult your dealer for advice if you plan to ride your vehicle at an altitude above 2,500 m (8,000 feet).

NOTICE

If the vehicle is transported to a place 2,000 m (6,500 feet) higher or lower than the start point, you may not be able to achieve sufficient engine performance at the new altitude. Consult your dealer before transporting your vehicle.

1. Make sure the engine stop switch is in the ◯ (Run) position.
2. Turn the ignition switch to the ▌(On) position.
3. Shift the transmission to Neutral (N indicator comes on). Alternatively, pull in the clutch lever to start your vehicle with the transmission in gear so long as the side stand is raised.
4. Press the start button with the throttle completely closed.

Continued

Starting the Engine *(Continued)*

If you cannot start the engine:

Open the throttle slightly (about 3 mm (0.1 in), without freeplay).

About 3 mm (0.1 in), without freeplay

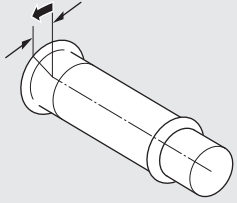

If the engine does not start:

① Open the throttle fully and press the start button for 5 seconds.
② Repeat the normal starting procedure.
③ If the engine starts, open the throttle slightly if idling is unstable.
④ If the engine does not start, wait 10 seconds before trying steps ① & ② again.

If Engine Will Not Start P.77

Shifting Gears

Your vehicle transmission has 5 forward gears in a one-down, four-up shift pattern. If you put the vehicle in gear with the side stand down, the engine will shut off.

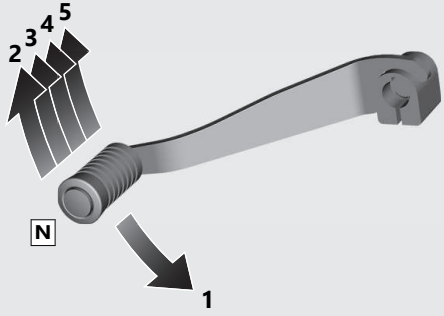

Refuelling

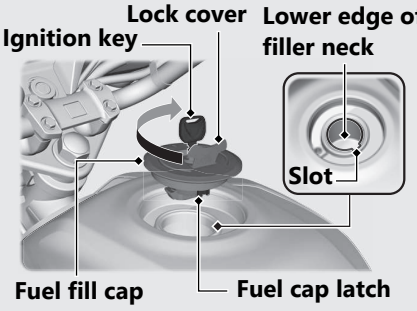

Do not fill with fuel above the lower edge of the filler neck.

Fuel type: Unleaded petrol only

Fuel octane number: Your vehicle is designed to use Research Octane Number (RON) 91 or higher.

Tank capacity: 11.0 L (2.91 US gal, 2.42 Imp gal)

Refuelling and Fuel Guidelines P.13

Opening the Fuel Fill Cap

Open the lock cover, insert the ignition key, and turn it clockwise to open the fuel fill cap.

Closing the Fuel Fill Cap

1. After refuelling, align the fuel cap latch with the slot in the filler neck. Push the fuel fill cap into the filler neck until it snaps closed and locks.
2. Remove the ignition key and close the lock cover.
   ▶ The ignition key cannot be removed if the cap is not locked.

⚠WARNING

Petrol is highly flammable and explosive. You can be burned or seriously injured when handling fuel.

- Stop the engine, and keep heat, sparks, and flame away.
- Handle fuel only outdoors.
- Wipe up spills immediately.

Storage Equipment

Tool Kit/Document Bag

The tool kit is located under side of the seat.
Document bag is located under the seat.

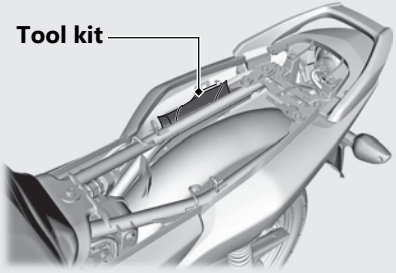

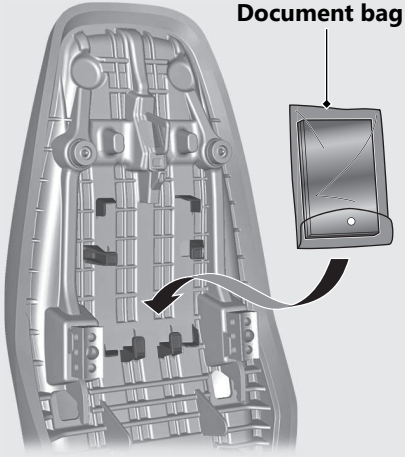

Removing the Seat P.60

Continued

Storage Equipment *(Continued)*

Helmet holder

The helmet holders are located under the seat.

▶ Use the helmet holder only when parked.

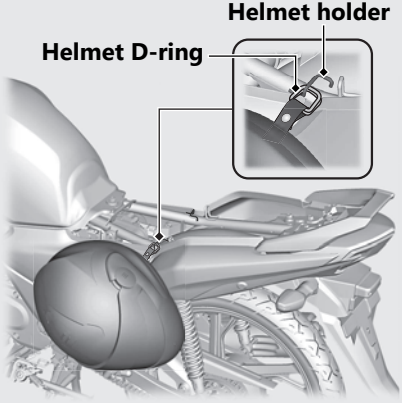

Removing the Seat P.60

⚠WARNING

Riding with a helmet attached to the holder can interfere with the rear wheel or suspension and could cause a crash in which you can be seriously hurt or killed.

Use the helmet holder only while parked. Do not ride with a helmet secured by the holder.

Maintenance

Please read “Importance of Maintenance” and “Maintenance Fundamentals” carefully before attempting any maintenance. Refer to “Specifications” for service data.

Importance of Maintenance ..... P. 44
Maintenance Schedule ..... P. 45
Maintenance Fundamentals ..... P. 48
Tool ..... P. 58
Removing & Installing Body Components .. P. 59
Battery ..... P. 59
Seat ..... P. 60
Side Cover ..... P. 61
Engine Oil ..... P. 62
Brakes ..... P. 64
Side Stand ..... P. 70
Drive Chain ..... P. 71
Clutch ..... P. 72
Throttle ..... P. 74
Other Adjustments ..... P. 75
Adjusting the Rear Suspension ..... P. 75

Importance of Maintenance

Importance of Maintenance

Keeping your vehicle well-maintained is absolutely essential to your safety and to protect your investment, obtain maximum performance, avoid breakdowns, and reduce air pollution. Maintenance is the owner's responsibility. Be sure to inspect your vehicle before each ride, and perform the periodic checks specified in the Maintenance Schedule.
➔ P. 45

⚠WARNING

Improperly maintaining your vehicle or failing to correct a problem before you ride can cause a crash in which you can be seriously hurt or killed.

Always follow the inspection and maintenance recommendations and schedules in this owner's manual.

Maintenance Safety

Always read the maintenance instructions before you begin each task, and make sure that you have the tools, parts, and skills required. We cannot warn you of every conceivable hazard that can arise in performing maintenance. Only you can decide whether or not you should perform a given task.

Follow these guidelines when performing maintenance.

- Stop the engine and remove the key.
- Place your vehicle on a firm, level surface using the side stand, centre stand or a maintenance stand to provide support.
- Allow the engine, muffler, brakes, and other high-temperature parts to cool before servicing as you can get burned.
- Run the engine only when instructed, and do so in a well-ventilated area.

Maintenance Schedule

The maintenance schedule specifies the maintenance requirements necessary to ensure safe, dependable performance, and proper emission control.

Maintenance work should be performed in accordance with Honda's standards and specifications by properly trained and equipped technicians. Your dealer meets all of these requirements. Keep an accurate record of maintenance to help ensure that your vehicle is properly maintained.
Make sure that whomever performs the maintenance completes this record.

All scheduled maintenance is considered a normal owner operating cost and will be charged to you by your dealer. Retain all receipts. If you sell the vehicle, these receipts should be transferred with the vehicle to the new owner.

Honda recommends that your dealer should road test your vehicle after each periodic maintenance is carried out.

Continued

Maintenance Schedule

Items		Pre-ride Check ➔ P. 48	Frequency *1								Annual Check	Regular Replace	Refer to page
			× 1,000 km	1	6	12	18	24	30	36			
			× 1,000 mi	0.6	4	8	12	16	20	24			
Fuel Line	🔧				I	I	I	I	I	I	I		–
Fuel Level		I											–
Throttle Operation	🔧	I			I	I	I	I	I	I	I		74
Air Cleaner *2	🔧						R			R			–
Crankcase Breather*3					C	C	C	C	C	C			–
Spark Plug					I	R	I	R	I	R			–
Valve Clearance	🔧				I	I	I	I	I	I			–
Engine Oil		I		R	R	R	R	R	R	R	R		62
Engine Oil Filter				R		R		R		R			–
Engine Idle Speed	🔧			I	I	I	I	I	I	I	I		–
Evaporative Emission Control System	🔧						I			I			–
Drive Chain		I	1000 km (600mi) : I L										71

Maintenance Level

🔧 : Intermediate. We recommend service by your dealer, unless you have the necessary tools and are mechanically skilled.
Procedures are provided in an official Honda Shop Manual.

🛠 : Technical. In the interest of safety, have your vehicle serviced by your dealer.

Maintenance Legend

I : Inspect (clean, adjust, lubricate, or replace, if necessary)
R : Replace
C : Clean
L : Lubricate

Items		Pre-ride Check ➔ P. 48	Frequency *1								Annual Check	Regular Replace	Refer to page
			× 1,000 km	1	6	12	18	24	30	36			
			× 1,000 mi	0.6	4	8	12	16	20	24			
Brake Fluid *4		I			I	I	I	I	I	I	I	2 Years	64
Brake Shoe/Pad Wear		I			I	I	I	I	I	I	I		65, 68
Brake System		I			I	I	I	I	I	I	I		64
Brakelight Switch					I	I	I	I	I	I	I		69
Headlight Aim					I	I	I	I	I	I	I		–
Lights/Horn		I											–
Engine Stop Switch		I											–
Clutch System		I			I	I	I	I	I	I	I		72
Side Stand		I			I	I	I	I	I	I	I		70
Suspension	🔧				I	I	I	I	I	I	I		75
Nuts, Bolts, Fasteners	🔧					I		I		I	I		–
Wheels/Tyres	🔧	I			I	I	I	I	I	I	I		56
Steering Head Bearings	🔧					I		I		I	I		–

Notes:

*1 : At higher odometer reading, repeat at the frequency interval established here.

*2 : Service more frequently when riding in unusually wet or dusty areas.

*3 : Service more frequently when riding in rain or at full throttle.

*4 : Replacement requires mechanical skill.

Maintenance Fundamentals

Pre-ride Inspection

To ensure safety, it is your responsibility to perform a pre-ride inspection and make sure that any problem you find is corrected. A pre-ride inspection is a must, not only for safety, but because having a breakdown, or even a flat tyre, can be a major inconvenience.

Check the following items before you get on your vehicle:

- Fuel level - Fill fuel tank when necessary. ➲ P. 40
- Throttle - Check for smooth opening and full closing in all steering positions. ➲ P. 74
- Engine oil level - Add engine oil if necessary. Check for leaks. ➲ P. 62
- Drive chain - Check condition and slack, adjust and lubricate if necessary. ➲ P. 71
- Brakes - Check operation;
  Front: check brake fluid level and pads wear. ➲ P. 64, ➲ P. 65
  Combi Brake: check brake fluid level. ➲ P. 64
  Rear: check shoes wear and freeplay, adjust if necessary. ➲ P. 68, ➲ P. 66
- Lights and horn - Check that lights, indicators and horn function properly.
- Engine stop switch - Check for proper function. ➲ P. 34
- Clutch - Check operation;
  Adjust freeplay if necessary. ➲ P. 72
- Side stand ignition cut-off system - Check for proper function. ➲ P. 70
- Wheels and tyres - Check condition, air pressure and adjust if necessary. ➲ P. 56

Replacing Parts

Always use Honda Genuine Parts or their equivalents to ensure reliability and safety.

When ordering coloured components, specify the model name, colour, and code mentioned on the colour label.
The colour label is attached to the frame under the seat. ➡ P. 60

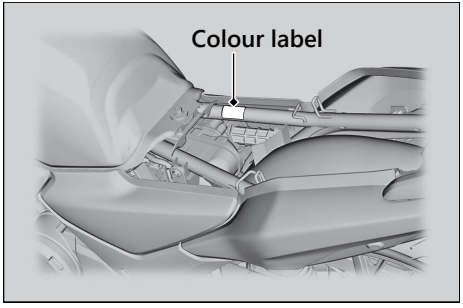

⚠WARNING

Installing non-Honda parts may make your vehicle unsafe and cause a crash in which you can be seriously hurt or killed.

Always use Honda Genuine Parts or equivalents that have been designed and approved for your vehicle.

Battery

Your vehicle has a maintenance-free type battery. You do not have to check the battery electrolyte level or add distilled water. Clean the battery terminals if they become dirty or corroded.
Do not remove the battery cap seals. There is no need to remove the cap when charging.

NOTICE
Your battery is a maintenance-free type and can be permanently damaged if the cap strip is removed.

This symbol on the battery means that this product must not be treated as household waste.

NOTICE
An improperly disposed of battery can be harmful to the environment and human health. Always confirm local regulations for proper battery disposal instruction.

What to do in an emergency

If any of the following occur, immediately see your doctor.

- Electrolyte splashes into your eyes:
  - ▶ Wash your eyes repeatedly with cool water for at least 15 minutes. Using water under pressure can damage your eyes.
- Electrolyte splashes onto your skin:
  - ▶ Remove affected clothing and wash your skin thoroughly using water.
- Electrolyte splashes into your mouth:
  - ▶ Rinse mouth thoroughly with water, and do not swallow.

⚠WARNING

The battery gives off explosive hydrogen gas during normal operation.

A spark or flame can cause the battery to explode with enough force to kill or seriously hurt you.

Wear protective clothing and a face shield, or have a skilled mechanic do the battery servicing.

Cleaning the Battery Terminals

1. Remove the battery. ➡P. 59
2. If the terminals are starting to corrode and are coated with a white substance, wash with warm water and wipe clean.

Continued

3. If the terminals are heavily corroded, clean and polish the terminals with a wire brush or sandpaper. Wear safety glasses.

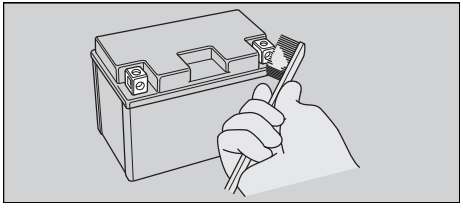

4. After cleaning, reinstall the battery.

The battery has a limited life span. Consult your dealer about when you should replace the battery. Always replace the battery with another maintenance-free battery of the same type.

NOTICE

Installing non-Honda electrical accessories can overload the electrical system, discharging the battery and possibly damaging the system.

Fuses

Fuses protect the electrical circuits on your vehicle. If something electrical on your vehicle stops working, check for and replace any blown fuses. ➡ P. 84

Inspecting and Replacing Fuses

Turn the ignition switch to the ○ (Off) position to remove and inspect fuses. If a fuse is blown, replace with a fuse of the same rating. For fuse ratings, see "Specifications." ➡ P. 99

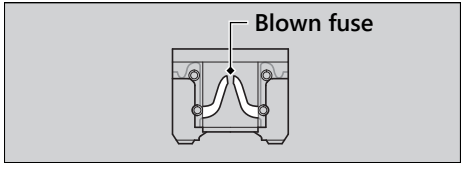

NOTICE

Replacing a fuse with one that has a higher rating greatly increases the chance of damage to the electrical system.

If a fuse fails repeatedly, you likely have an electrical fault. Have your vehicle inspected by your dealer.

Engine Oil

Engine oil consumption varies and oil quality deteriorates according to riding conditions and time elapsed.
Check the engine oil level regularly, and add the recommended engine oil if necessary. Dirty oil or old oil should be changed as soon as possible.

Selecting the Engine Oil

For recommended engine oil, see "Specifications." P. 98

If you use non-Honda engine oil, check the label to make sure that the oil satisfies all of the following standards:

- JASO T 903 standard*1: MA
- SAE standard*2: 10W-30
- API classification*3: SG or higher

*1. The JASO T 903 standard is an index for engine oils for 4-stroke motorcycle engines. There are two classes: MA and MB. For example, the following label shows the MA classification.

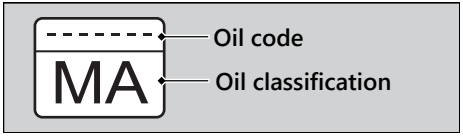

*2. The SAE standard grades oils by their viscosity.

*3. The API classification specifies the quality and performance rating of engine oils. Use SG or higher oils, excluding oils marked as "Energy Conserving" or "Resource Conserving" on the circular API service symbol.

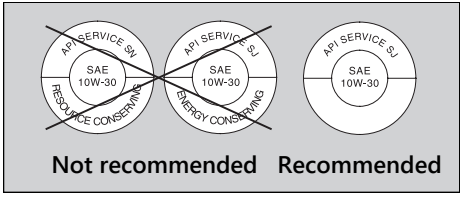

Brake Fluid

Do not add or replace brake fluid, except in an emergency. Use only fresh brake fluid from a sealed container. If you do add fluid, have the brake system serviced by your dealer as soon as possible.

NOTICE
Brake fluid can damage plastic and painted surfaces.
Wipe up spills immediately and wash thoroughly.

Recommended brake fluid:
Honda DOT 3 or DOT 4 Brake Fluid or equivalent

Drive Chain

The drive chain must be inspected and lubricated regularly. Inspect the chain more frequently if you often ride on bad roads, ride at high speed, or ride with repeated fast acceleration. ➡ P. 71

If the chain does not move smoothly, makes strange noises, has damaged rollers, has loose pins, has missing O-rings, or kinks, have the chain inspected by your dealer.

Also inspect the drive sprocket and driven sprocket. If either has worn or damaged teeth, have the sprocket replaced by your dealer.

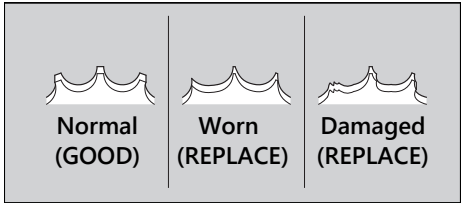

NOTICE
Use of a new chain with worn sprockets will cause rapid chain wear.

Cleaning and Lubricating

After inspecting the slack, clean the chain and sprockets while rotating the rear wheel. Use a dry cloth with chain cleaner designed specifically for O-ring chains, or neutral detergent. Use a soft brush if the chain is dirty. After cleaning, wipe dry and lubricate with the recommended lubricant.

Recommended lubricant:

Drive chain lubricant designed specifically for O-ring chains
If not available, use SAE 80 or 90 gear oil.

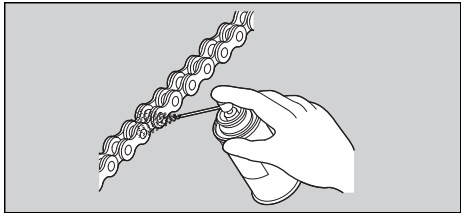

Do not use a steam cleaner, a high pressure cleaner, a wire brush, volatile solvent such as petrol and benzene, abrasive cleaner, chain cleaner or lubricant NOT designed specifically for O-ring chains as these can damage the rubber O-ring seals.
Avoid getting lubricant on the brakes or tyres.
Avoid applying excess chain lubricant to prevent spray onto your clothes and the vehicle.

Crankcase Breather

Service more frequently when riding in rain, at full throttle, or after the vehicle is washed or overturned. Service if the deposit level can be seen in the transparent section of the drain tube.
If the drain tube overflows, the air filter may become contaminated with engine oil causing poor engine performance.

Tyres (Inspecting/Replacing)

Checking the Air Pressure

Visually inspect your tyres and use an air pressure gauge to measure the air pressure at least once a month or any time you think the tyres look low. Always check air pressure when your tyres are cold.

Inspecting for Damage

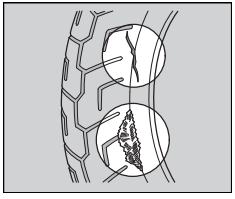

Inspect the tyres for cuts, slits, or cracks that exposes fabric or cords, or nails or other foreign objects embedded in the side of the tyre or the tread. Also inspect for any unusual bumps or bulges in the side walls of the tyres.

Inspecting for Abnormal Wear

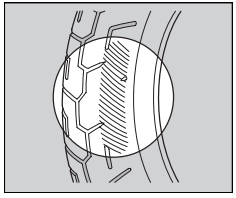

Inspect the tyres for signs of abnormal wear on the contact surface.

Inspecting Tread Depth

Inspect the tread wear indicators. If they become visible, replace the tyres immediately.

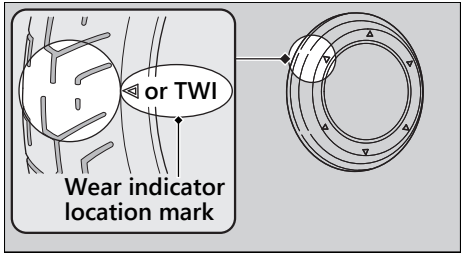

⚠WARNING

Riding on tyres that are excessively worn or improperly inflated can cause a crash in which you can be seriously hurt or killed.

Follow all instructions in this owner's manual regarding tyre inflation and maintenance.

Have your tyres replaced by your dealer.
For recommended tyres and air pressure, see "Specifications." ➡P. 98
Follow these guidelines whenever you replace tyres.

- Use the recommended tyres or equivalents of the same size, construction, speed rating, and load range.
- Do not install a tube inside a tubeless tyre on this vehicle. Excessive heat build-up can cause the tube to burst.
- Use only tubeless tyres on this vehicle. The rims are designed for tubeless tyres, and during hard acceleration or braking, a tube-type tyre could slip on the rim and cause the tyre to rapidly deflate.

⚠WARNING

Installing improper tyres on your vehicle can adversely affect handling and stability, and can cause a crash in which you can be seriously hurt or killed.

Always use the size and type of tyres recommended in this owner's manual.

Tool

The tool kit is stored under side of the seat.
➔ P. 60

You can perform some roadside repairs, minor adjustments and parts replacement with the provided tools.

- 14 × 17 mm Open end wrench
- Spark plug wrench
- Standard/Phillips screwdriver
- Pin spanner

Battery

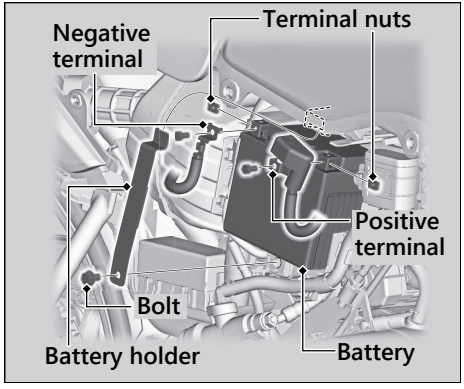

Removal

Make sure the ignition switch is in the ○ (Off) position.

1. Remove the right side cover. ➡ P. 61
2. Remove the bolt.
3. Remove the battery holder.
4. Disconnect the negative ⊖ terminal from the battery.
5. Disconnect the positive ⊕ terminal from the battery.
6. Remove the battery taking care not to drop the terminal nuts.

Installation

Install the parts in the reverse order of removal. Always connect the positive ⊕ terminal first. Make sure that bolts and nuts are tight.

Make sure the clock information is correct after the battery is reconnected. ➡ P. 29

For proper handling of the battery, see

"Maintenance Fundamentals." ➡ P. 50
"Battery Goes Dead." ➡ P. 81

Seat

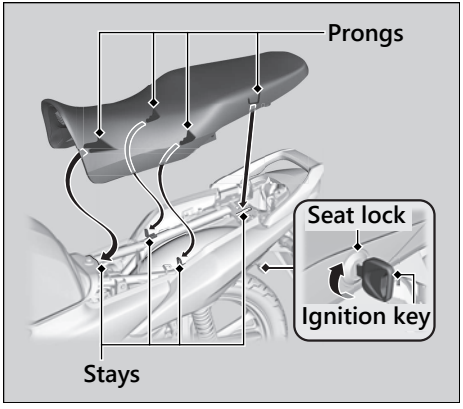

Removal

1. Insert the ignition key into the seat lock.
2. Turn it clockwise, then pull the seat up and back.

Installation

1. Insert the prongs into the stays on the frame.
2. Push forward and down on the rear of the seat until it locks in place.
   Make sure that the seat is locked securely in position to pull it up lightly.

The seat locks automatically when closed. Take care not to lock your key in the compartment under the seat.

20200519001524_32K0NB000_eng_BOOK Page 64 Tuesday, May 19 2020 24:18:26 JST

Side Cover

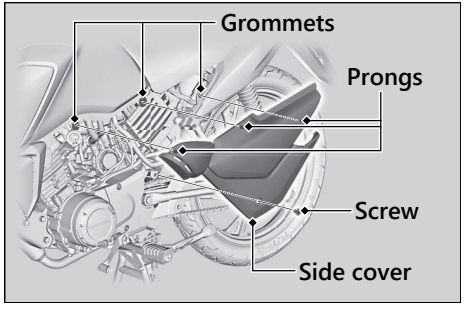

The right and left side covers can be removed in the same manner.

Removal

1. Remove the screw.
2. Remove the prongs from the grommets.
3. Remove the side cover.

Installation

Install the parts in the reverse order of removal.

Engine Oil

Checking the Engine Oil

1. If the engine is cold, idle the engine for 3 to 5 minutes.
2. Turn the ignition switch to the ○ (Off) position and wait for 2 to 3 minutes.
3. Place your vehicle in an upright position on a firm, level surface.
4. Remove the oil fill cap/dipstick and wipe it clean.
5. Insert the oil fill cap/dipstick until it seats, but don't screw it in.
6. Check that the oil level is between the upper level and lower level marks on the oil fill cap/dipstick.
7. Securely install the oil fill cap/dipstick.

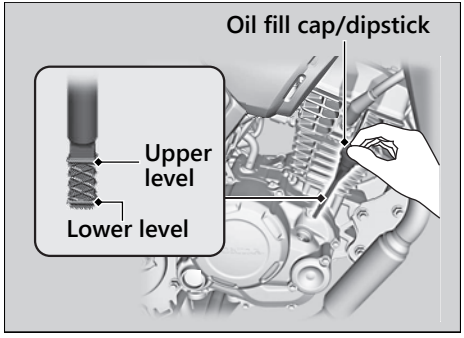

Adding Engine Oil

If the engine oil is below or near the lower level mark, add the recommended engine oil.
➡ P. 53, ➡ P. 98

1. Remove the oil fill cap/dipstick. Add the recommended oil until it reaches the upper level mark.
   - ▶ Place your vehicle in an upright position on a firm, level surface when checking the oil level.
   - ▶ Do not overfill above the upper level mark.
   - ▶ Make sure no foreign objects enter the oil filler opening.
   - ▶ Wipe up any spills immediately.
2. Securely reinstall the oil fill cap/dipstick.

NOTICE
Overfilling with oil or operating with insufficient oil can cause damage to your engine. Do not mix different brands and grades of oil. They may affect lubrication and clutch operation.

For the recommended oil and oil selection guidelines, see "Maintenance Fundamentals."
➡ P. 53

Checking Brake Fluid

1. Place your vehicle in an upright position on a firm, level surface.
2. Front brake Check that the brake fluid reservoir is horizontal and that the fluid level is above the LWR level mark.
   Combi brake Check that the brake fluid reservoir is horizontal and that the fluid level is between the LOWER level and UPPER level marks.

If the brake fluid level in either reservoir is below the LWR level mark or LOWER level mark or the brake lever freeplay becomes excessive, inspect the brake pads for wear. If the brake pads are not worn, you most likely have a leak. Have your vehicle inspected by your dealer.

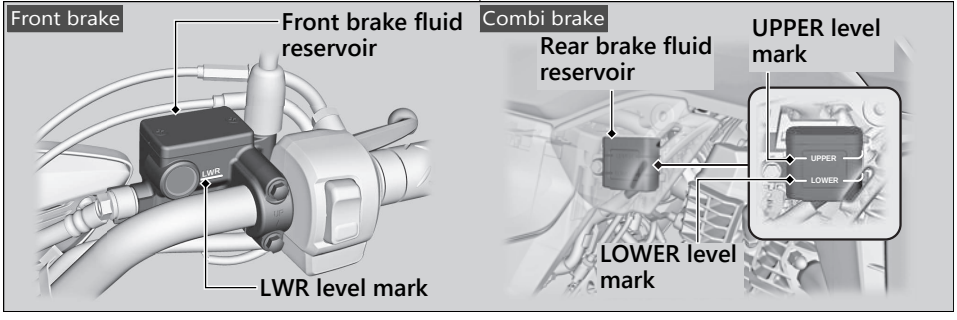

20200519001524_32K0NB000_eng_BOOK Page 68 Tuesday, May 19 2020 24:18:26 JST

Inspecting the Front Brake Pads

Check the condition of the brake pad wear indicators.
The pads need to be replaced if a brake pad is worn to the bottom of the indicator.

Inspect the brake pads from in front of the brake caliper.

If necessary have the pads replaced by your dealer.
Always replace both left and right brake pads at the same time.

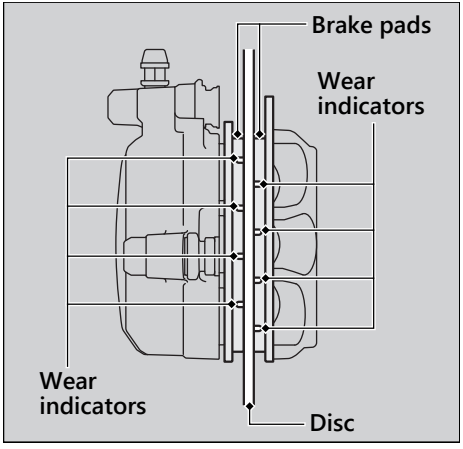

Inspecting the Rear Brake Pedal Freeplay

1. Place your vehicle on its centre stand on a firm, level surface.
2. Measure the distance the rear brake pedal moves before the brake takes hold.

Freeplay at the tip of the brake pedal:
20 - 30 mm (0.8 - 1.2 in)

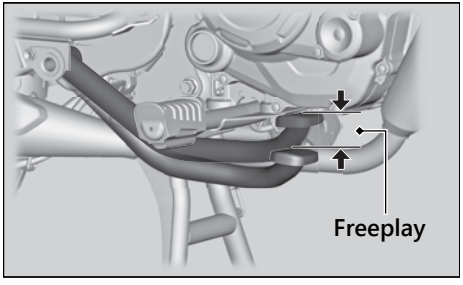

Make sure the brake rod, brake arm, spring and fastener are in good condition.

20200519001524_32K0NB000_eng_BOOK Page 70 Tuesday, May 19 2020 24:18:26 JST

Adjusting the Rear Brake Pedal Freeplay

Make sure the cut-out on the adjusting nut is seated on the brake arm pin when adjusting the freeplay.

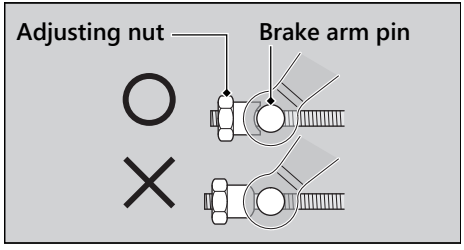

If proper adjustment cannot be obtained by this method, see your dealer.

1. Adjust by turning the rear brake adjusting nut a half-turn at a time.

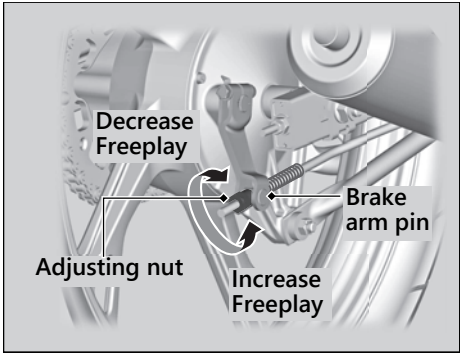

2. Apply the brake several times and check for free wheel rotation after the brake pedal is released.

Continued

3. Push the brake arm to confirm that there is a gap between the rear brake adjusting nut and brake arm pin.

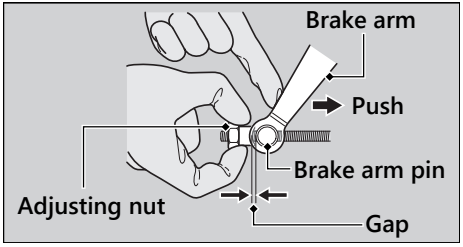

After adjustment, confirm the freeplay of the brake pedal.
Make sure the brake rod, brake arm, spring and fastener are in good condition.

NOTICE
Do not turn the adjuster beyond its natural limits.

Inspecting the Rear Brake Shoe Wear

The rear brake is equipped with a brake wear indicator.

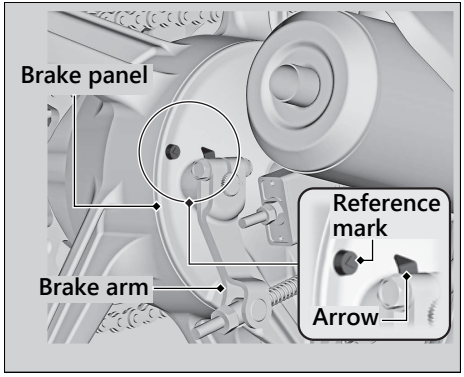

20200519001524_32K0NB000_eng_BOOK Page 72 Tuesday, May 19 2020 24:18:26 JST

When the brake is applied, an arrow attached to the brake arm moves toward a reference mark on the brake panel. If the arrow aligns with the reference mark on full application of the brake, the brake shoes must be replaced. See your dealer for this service.

When the brake service is necessary, see your dealer. Use only Honda Genuine Parts or its equivalent.

Adjusting the Brakelight Switch

Check the operation of the brakelight switch.

1. Remove the right side cover. ➡ P. 61
2. Hold the brakelight switch and turn the adjusting nut in the direction A if the switch operates too late, or turn the nut in the direction B if the switch operates too soon.
3. Install the right side cover.

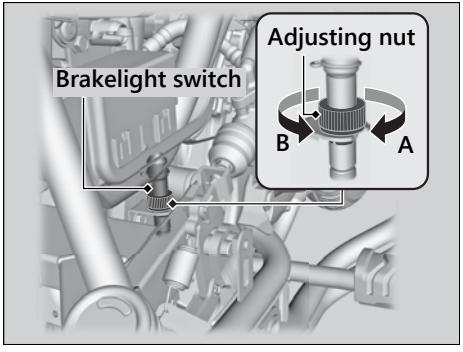

Side Stand

Checking the Side Stand

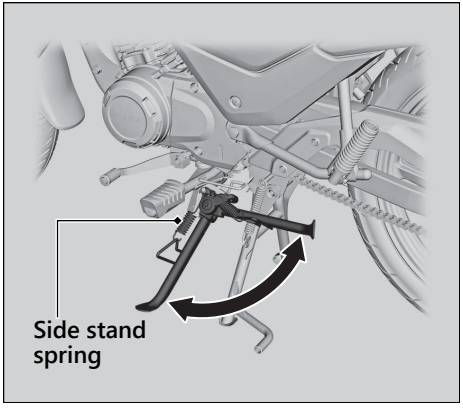

1. Check that the side stand operates smoothly. If the side stand is stiff or squeaky, clean the pivot area and lubricate the pivot bolt with clean grease.
2. Check the spring for damage or loss of tension.
3. Sit on the vehicle, shift the transmission to Neutral, and raise the side stand.
4. Start the engine, pull the clutch lever in, and shift the transmission into gear.
5. Lower the side stand all the way. The engine should stop as you lower the side stand. If the engine doesn't stop, have your vehicle inspected by your dealer.

Inspecting the Drive Chain Slack

Check the drive chain slack at several points along the chain. If the slack is not constant at all points, some links may be kinked and binding.
Have the chain inspected by your dealer.

1. Shift the transmission to Neutral. Stop the engine.
2. Place your vehicle on its centre stand on a firm, level surface.
3. Check the slack in the lower half of the drive chain midway between the sprockets.

Drive chain slack:
20 - 30 mm (0.8 - 1.2 in)

▶ Do not ride your vehicle if the slack exceeds 50 mm (2.0 in).

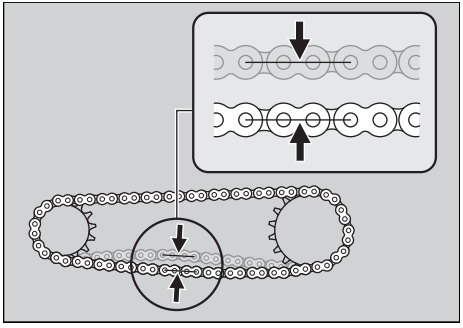

4. Rotate the rear wheel and check that the chain moves smoothly.
5. Inspect the sprockets. ➡ P. 54
6. Clean and lubricate the drive chain. ➡ P. 55

Clutch

Checking the Clutch

Checking the Clutch Lever Freeplay

Check the clutch lever freeplay.

Freeplay at the clutch lever:
10 - 20 mm (0.39 - 0.79 in)

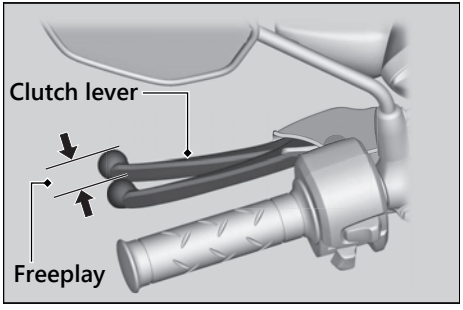

Check the clutch cable for kinks or signs of wear. If necessary have it replaced by your dealer.
Lubricate the clutch cable with a commercially available cable lubricant to prevent premature wear and corrosion.

NOTICE
Improper freeplay adjustment can cause premature clutch wear.

Adjusting the Clutch Lever Freeplay

1. Loosen the lock nut.
2. Turn the adjusting nut until the clutch lever freeplay is 10 - 20 mm (0.39 - 0.79 in).
3. Tighten the lock nut and check the clutch lever freeplay again.
4. Start the engine, pull the clutch lever in, and shift into gear. Make sure the engine does not stall and the vehicle does not creep. Gradually release the clutch lever and open the throttle. Your vehicle should move smoothly and accelerate gradually.

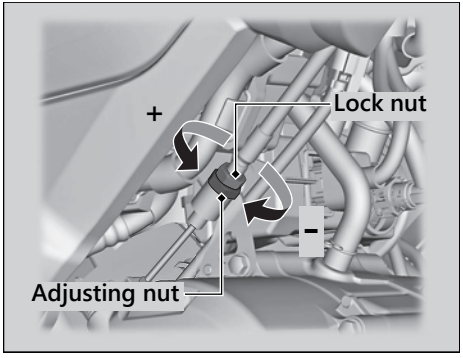

If proper adjustment cannot be obtained or the clutch does not work correctly, see your dealer.

Throttle

Checking the Throttle

With the engine off, check that the throttle rotates smoothly from fully closed to fully open in all steering positions and throttle freeplay is correct. If the throttle does not move smoothly, close automatically, or if the cable is damaged, have the vehicle inspected by your dealer.

Freeplay at the throttle grip flange:
2 - 6 mm (0.1 - 0.2 in)

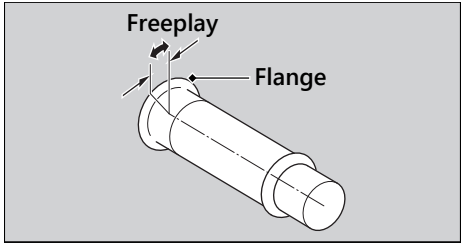

Adjusting the Rear Suspension

Adjusting the suspension requires a pin spanner. We recommend that you have your vehicle serviced by your dealer.

Spring Preload

You can adjust the spring preload by the adjuster to suit the load or the road surface. Use the pin spanner to turn the adjuster. Position 1 is for a decrease spring preload (soft), or turn the position 3 to 5 to increase spring preload (hard).
The standard position is 2.

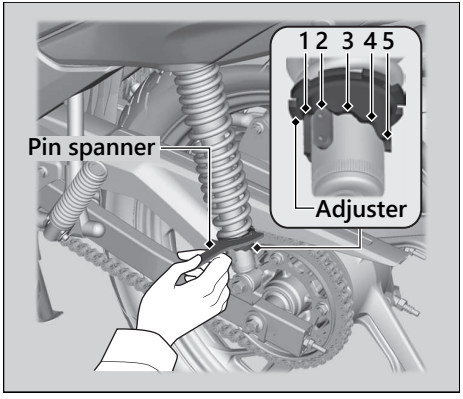

NOTICE
Attempting to adjust directly from 1 to 5 or 5 to 1 may damage the shock absorber.

NOTICE
Do not turn the adjuster beyond its limits.
Adjust both left and right shock absorbers to the same spring preload.

Troubleshooting

Engine Will Not Start ..... P. 77
Warning Indicators On or Flashing ..... P. 78
PGM-FI (Programmed Fuel Injection) Malfunction Indicator Lamp (MIL) ..... P. 78
Other Warning Indications ..... P. 79
Fuel Gauge Failure Indication ..... P. 79
Tyre Puncture ..... P. 80
Electrical Trouble ..... P. 81
Battery Goes Dead ..... P. 81
Burned-out Light Bulb ..... P. 81
Blown Fuse ..... P. 84

Engine Will Not Start

Starter Motor Operates But Engine Does Not Start

Check the following items:

- Check the correct engine starting sequence. ➡ P. 37
- Check that there is petrol in the fuel tank.
- Check if the PGM-FI malfunction indicator lamp (MIL) is on.
  - ▶ If the indicator lamp is on, contact your dealer as soon as possible.

Starter Motor Does Not Operate

Check the following items:

- Check the correct engine starting sequence. ➡ P. 37
- Make sure engine stop switch is in the ◯ (Run) position. ➡ P. 34
- Check for a blown fuse. ➡ P. 84
- Check for a loose battery connection (➡ P. 59) or battery terminal corrosion (➡ P. 50).
- Check the condition of the battery. ➡ P. 81

If the problem continues, have your vehicle inspected by your dealer.

PGM-FI (Programmed Fuel Injection) Malfunction Indicator Lamp (MIL)

Reasons for the indicator lamp to come on or blink

- Comes on if there is a problem with the engine emissions control system.
- Blinks when engine misfiring is detected.

What to do when the indicator lamp comes on

Avoid high speeds and immediately get your vehicle inspected at a dealer.

What to do when the indicator lamp blinks

Park the vehicle in a safe place with no flammable items and wait at least 10 minutes with the engine stopped until it cools.

NOTICE

If you drive with the malfunction indicator lamp on, the emissions control system and the engine could be damaged.

NOTICE

If the malfunction indicator lamp blinks again when restarting the engine, drive to the nearest dealer at 50 km/h (31 mph) or less. Have your vehicle inspected.

Other Warning Indications

Fuel Gauge Failure Indication

If the fuel system has an error, the fuel gauge indicators will be displayed as shown in the illustrations.
If these occur, see your dealer as soon as possible.

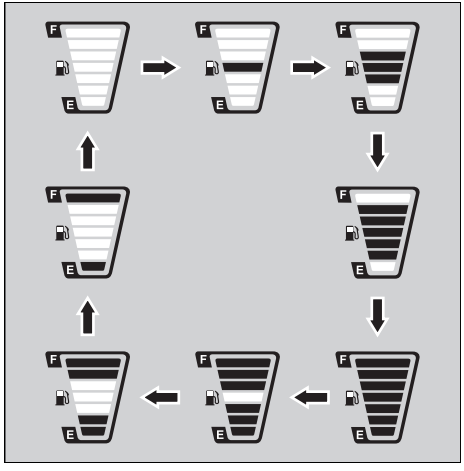

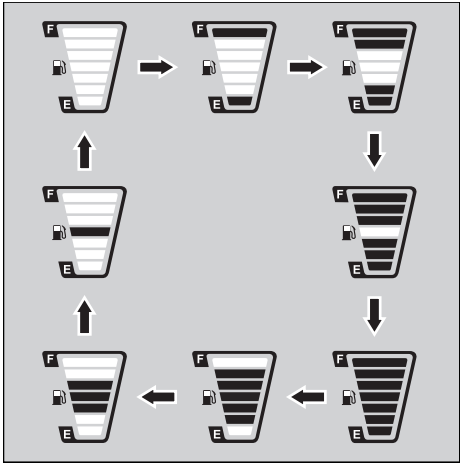

Tyre Puncture

Repairing a puncture or removing a wheel requires special tools and technical expertise. We recommend you have this type of service performed by your dealer.
After an emergency repair, always have the tyre inspected/replaced by your dealer.

Emergency Repair Using a Tyre Repair Kit

If your tyre has a minor puncture, you can make an emergency repair using a tubeless tyre repair kit.
Follow the instructions provided with the emergency tyre repair kit.
Riding your vehicle with a temporary tyre repair is very risky. Do not exceed 50 km/h (30 mph). Have the tyre replaced by your dealer as soon as possible.

⚠WARNING

Riding your vehicle with a temporary tyre repair can be risky. If the temporary repair fails, you can crash and be seriously injured or killed.

If you must ride with a temporary tyre repair, ride slowly and carefully and do not exceed 50 km/h (30 mph) until the tyre is replaced.

Electrical Trouble

Battery Goes Dead

Charge the battery using a motorcycle battery charger.
Remove the battery from the vehicle before charging.

Do not use an automobile-type battery charger, as these can overheat a motorcycle battery and cause permanent damage. If the battery does not recover after recharging, contact your dealer.

NOTICE
Jump starting using an automobile battery can damage your vehicle's electrical system and is not recommended.

Burned-out Light Bulb

Follow the procedure below to replace a burned-out light bulb.
Turn the ignition switch to the ○ (Off)or 🔒 (Lock) position.
Allow the bulb to cool before replacing it.
Do not use bulbs other than those specified.
Check the replacement bulb for correct operation before riding.

For the light bulb wattage, see "Specifications." ➡P. 99

The headlight uses several LEDs.
If there is an LED which is not turned on, see your dealer for servicing.

Brakelight/Taillight Bulb

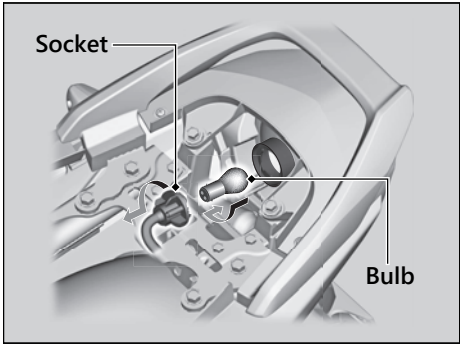

1. Remove the seat. ➡ P. 60
2. Turn the socket counterclockwise, and remove it.
3. Slightly press the bulb and turn it counterclockwise.
4. Install a new bulb and parts in reverse order of removal.

Front/Rear Turn Signal Light Bulb

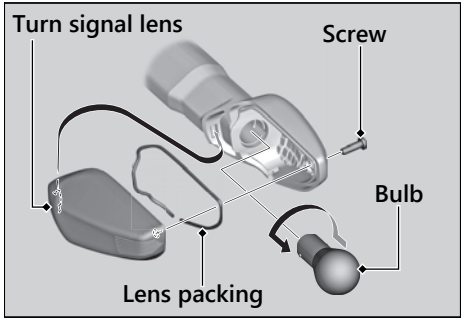

1. Remove the screw.
2. Remove the turn signal lens and lens packing.
3. Slightly press the bulb and turn it counterclockwise.
4. Install a new bulb and parts in the reverse order of removal.

Torque: 1 N·m (0.1 kgf·m, 0.7 lbf·ft)

License Plate Light Bulb

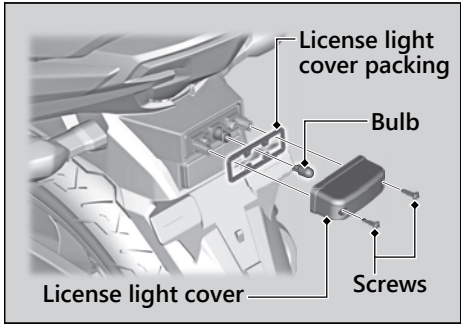

1. Remove the screws, license light cover and license light cover packing.
2. Pull out the bulb without turning it.
3. Install a new bulb and parts in reverse order of removal.
4. Install and tighten the screws.

Torque: 1 N·m (0.1 kgf·m, 0.7 lbf·ft)

Blown Fuse

Before handling fuses, see "Inspecting and Replacing Fuses." ➡ P. 52

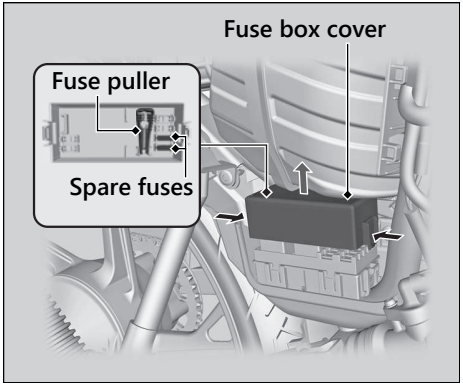

1. Remove the right side cover. ➡ P. 61
2. Remove the fuse box cover.
3. Pull the fuses out one by one with the fuse puller in the fuse box cover and check for a blown fuse.
   Always replace a blown fuse with a spare fuse of the same rating.
   ▶ Spare fuses are provided in the fuse box cover.
4. Reinstall parts in the reverse order of removal.

NOTICE

If a fuse fails repeatedly, you likely have an electrical problem. Have your vehicle inspected by your dealer.

Information

Service Diagnostic Recorders ..... P. 86
Keys ..... P. 86
Instruments, Controls, & Other Features ..... P. 87
Caring for Your Vehicle ..... P. 88
Storing Your Vehicle ..... P. 91
Transporting Your Vehicle ..... P. 92
You & the Environment ..... P. 93
Serial Numbers ..... P. 94
Fuels Containing Alcohol ..... P. 95
Catalytic Converter ..... P. 96

Service Diagnostic Recorders

Your vehicle is equipped with service-related devices that record information about powertrain performance and riding conditions. The data can be used to help technicians diagnose, repair and maintain the vehicle. This data may not be accessed by anyone else except as legally required or with the permission of the vehicle owner.
However this data may be accessed by Honda, its authorised dealers and authorised repairers, employees, representatives and contractors only for the purpose of the technical diagnosis, research and development of the vehicle.

Keys

Ignition Key

Be sure to record the key number provided with the key number plate. Store the spare key and key number in a safe location.
To make a duplicate, take the spare key or the key number to your dealer.
If you lose all ignition keys and the key number, the ignition switch assembly will probably have to be removed by your dealer to determine the key number.
A metal key holder may cause damage to the area surrounding the ignition switch.

Instruments, Controls, & Other Features

Ignition Switch

Leaving the ignition switch in the ❙ (On) position with the engine stopped will drain the battery.

Do not turn the key while riding.

Engine Stop Switch

Do not use the engine stop switch except in an emergency. Doing so when riding will cause the engine to suddenly turn off, making riding unsafe.
If you stop the engine using the engine stop switch, turn the ignition switch to the ○ (Off) position. Failing to do so will drain the battery.

Odometer

The display locks at 999,999 when the read-out exceeds 999,999.

Tripmeter

The tripmeters return to 0.0 when each read-out exceeds 9,999.9.

Also average fuel mileage and available driving distance are reset at the same time.

Document Bag

The owner's manual, registration, and insurance information can be stored in the plastic document bag located under the seat. ➔ P. 60

Ignition Cut-off System

A banking (lean angle) sensor automatically stops the engine and fuel pump if the vehicle falls over. To reset the sensor, you must turn the ignition switch to the ○ (Off) position and back to the ❙ (On) position before the engine can be restarted.

Caring for Your Vehicle

Frequent cleaning and polishing is important to ensure the life of your Honda. A clean vehicle makes it easier to spot potential problems.
In particular, seawater and salts used to prevent ice on roads promote the formation of corrosion. Always wash your vehicle thoroughly after riding on coastal or treated roads.

Washing

Allow the engine, muffler, brakes, and other high-temperature parts to cool before washing.

1. Rinse your vehicle thoroughly using a low pressure garden hose to remove loose dirt.
2. If necessary, use a sponge or a soft towel with mild cleaner to remove road grime.
   ▶ Clean the headlight lens, panels, and other plastic components with extra care to avoid scratching them.
   Avoid directing water into the air cleaner, muffler, and electrical parts.
3. Thoroughly rinse your vehicle with plenty of clean water and dry with a soft, clean cloth.
4. After the vehicle dries, lubricate any moving parts.
   ▶ Make sure that no lubricant spills onto the brakes or tyres. Brake discs, pads, drum or shoes contaminated with oil will suffer greatly reduced braking effectiveness and can lead to a crash.
5. Lubricate the drive chain immediately after washing and drying the vehicle.
6. Apply a coat of wax to prevent corrosion.
   ▶ Avoid products that contain harsh detergents or chemical solvents. These can damage the metal, paint, and plastic on your vehicle.
   Keep the wax clear of the tyres and brakes.
   ▶ If your vehicle has any matte painted parts, do not apply a coat of wax to the matte painted surface.

Washing Precautions

Follow these guidelines when washing:

- Do not use high-pressure washers:
  - ▶ High-pressure water cleaners can damage moving parts and electrical parts, rendering them inoperable.
  - ▶ Water in the air intake can be drawn into the throttle body and/or enter the air cleaner.
- Do not direct water at the muffler:
  - ▶ Water in the muffler can prevent starting and causes rust in the muffler.
- Dry the brakes:
  - ▶ Water adversely affects braking effectiveness. After washing, apply the brakes intermittently at low speed to help dry them.
- Do not direct water under the seat:
  - ▶ Water in the under seat compartment can damage your documents and other belongings.
- Do not direct water at the air cleaner:
  - ▶ Water in the air cleaner can prevent the engine from starting.
- Do not direct water near the headlight:
  - ▶ The headlight's inside lens may fog temporarily after washing or while riding in the rain. This does not impact the headlight function.
    However, if you see a large amount of water or ice accumulated inside the lens(es), have your vehicle inspected by your dealer.
- Do not use wax or polishing compounds on mat painted surface:
  - ▶ Use a soft cloth or sponge, plenty of water, and a mild detergent to clean mat painted surfaces. Dry with a soft clean cloth.

Continued

Aluminium Components

Aluminium will corrode from contact with dirt, mud, or road salt. Clean aluminium parts regularly and follow these guidelines to avoid scratches:

- Do not use stiff brushes, steel wool, or cleaners containing abrasives.
- Avoid riding over or scraping against curbs.

Panels

Follow these guidelines to prevent scratches and blemishes:

- Wash gently using a soft sponge and plenty of water.
- To remove stubborn stains, use diluted detergent and rinse thoroughly with plenty of water.
- Avoid getting petrol, brake fluid, or detergents on the instruments, panels, or headlight.

Exhaust Pipe and Muffler

When the exhaust pipe and muffler are painted, do not use a commercially available abrasive kitchen cleaning compound. Use a neutral detergent to clean the painted surface on the exhaust pipe and muffler. If you are not sure if your exhaust pipe and muffler are painted, contact your dealer.

Storing Your Vehicle

If you store your vehicle outdoors, you should consider using a full-body cover.
If you won't be riding for an extended period, follow these guidelines:

- Wash your vehicle and wax all painted surfaces (except matte painted surfaces). Coat chrome pieces with rust-inhibiting oil.
- Lubricate the drive chain. ➔ P. 54
- Place your vehicle on its centre stand and position a block so that both tyres are off the ground.
- After rain, remove the body cover and allow the vehicle to dry.
- Remove the battery (➔ P. 59) to prevent discharge. Fully charge the battery and then place it in a shaded, well-ventilated area.
  - ▶ If you leave the battery in place, disconnect the negative ⊖ terminal to prevent discharge.

After removing your vehicle from storage, inspect all maintenance items required by the Maintenance Schedule.

Transporting Your Vehicle

If your vehicle needs to be transported, it should be carried on a motorcycle trailer or a flatbed truck or trailer that has a loading ramp or lifting platform, and motorcycle tie-down straps. Never try to tow your vehicle with a wheel or wheels on the ground.

NOTICE
Towing your vehicle can cause serious damage to the transmission.

You & the Environment

Owning and riding a vehicle can be enjoyable, but you must do your part to protect the environment.

Choose Sensible Cleaners

Use a biodegradable detergent when you wash your vehicle. Avoid aerosol spray cleaners that contain chlorofluorocarbons (CFCs) which damage the atmosphere's protective ozone layer.

Recycle Wastes

Put oil and other toxic wastes in approved containers and take them to a recycling centre. Call your local or state office of public works or environmental services to find a recycling centre in your area, and to get instructions on how to dispose of non-recyclable wastes. Do not place used engine oil in the trash, or pour it down a drain or on the ground. Used oil, petrol, and cleaning solvents contain poisons that can hurt refuse workers and contaminate drinking water, lakes, rivers, and oceans.

Serial Numbers

The frame and engine serial numbers uniquely identify your vehicle and are required in order to register your vehicle. They may also be required when ordering replacement parts. You should record these numbers and keep them in a safe place.

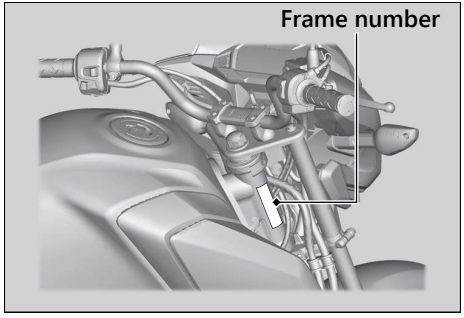

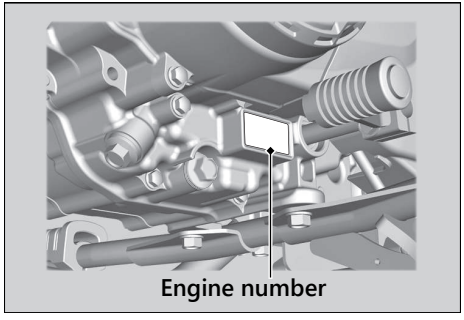

Fuels Containing Alcohol

Some conventional fuels blended with alcohol are available in some locales to help reduce emissions to meet clean air standards. If you plan to use blended fuel, check that it is unleaded and meets the minimum octane rating requirement.

The following fuel blends can be used in your vehicle:

- Ethanol (ethyl alcohol) up to 10% by volume.
  - ▶ Petrol containing ethanol may be marketed under the name Gasohol.

The use of petrol containing more than 10% ethanol may:

- Damage the painting of the fuel tank.
- Damage the rubber tubes of the fuel line.
- Cause corrosion of the fuel tank.
- Cause poor drivability.

NOTICE

Use of blended fuels containing higher than approved percentages can damage metal, rubber, plastic parts of your fuel system.

If you notice any undesirable operating symptoms or performance problems, try a different brand of petrol.

Catalytic Converter

This vehicle is equipped with a three-way catalytic converter. The catalytic converter contains precious metals that serve as catalysts in high temperature chemical reactions that convert hydrocarbons (HC), carbon monoxide (CO), and oxides of nitrogen (NOx) in the exhaust gasses into safe compounds.

A defective catalytic converter contributes to air pollution and can impair your engine's performance. A replacement unit must be an original Honda part or equivalent.

Follow these guidelines to protect your vehicle's catalytic converter.

- Always use unleaded petrol. Leaded petrol will damage the catalytic converter.
- Keep the engine in good running condition.
- Have your vehicle serviced if your engine is misfiring, backfiring, stalling, or otherwise not running properly, stop riding and turn off the engine.

Specifications

■ Main Components

Overall length	2,015 mm (79.3 in)
Overall width	750 mm (29.5 in)
Overall height	1,100 mm (43.3 in)
Wheelbase	1,280 mm (50.4 in)
Minimum ground clearance	160 mm (6.3 in)
Caster angle	26° 0′
Trail	92 mm (3.6 in)
Curb weight	117 kg (258 lb)
Maximum weight capacity *1	170 kg (375 lb)
Maximum luggage weight *2	13 kg (29 lb)
Passenger capacity	Rider and 1 passenger
Minimum turning radius	2.04 m (6.7 ft)

*1 : Including rider, passenger, all luggage, and accessories.
*2 : Includes the weight of the luggage and added accessories.

Displacement	124 cm^3 (7.6 cu-in)	
Bore x stroke	50.0 x 63.1 mm (1.97 x 2.48 in)	
Compression ratio	10 : 1	
Fuel	Unleaded petrol Recommended: 91 RON or higher	
Fuels containing alcohol	ETHANOL up to 10 % by volume	
Tank capacity	11.0 L (2.91 US gal, 2.42 Imp gal)	
Battery	YTZ7S 12 V-6 Ah (10 HR) / 12 V-6.3 Ah (20 HR)	
Gear ratio	1st	3.454
	2nd	1.933
	3rd	1.315
	4th	1.095
	5th	0.933
Reduction ratio (primary / final)	3.421 / 2.928	

■ Service Data

Tyre size	Front	80/100 - 18M/C 47P
	Rear	90/90 - 18M/C 51P
Tyre type		Bias-ply, tubeless
Recommended Tyre	Front	CST C-910
	Rear	CST C-6011
Tyre category of use *1	Normal	Permitted
	Special	Not Permitted
	Snow	Not Permitted
	Moped	Not Permitted
Tyre air pressure	Front	175 kPa (1.75 kgf/cm^2, 25 psi)
	Rear	225 kPa (2.25 kgf/cm^2, 33 psi)
Spark plug	CPR8EA-9 (NGK)	
Spark plug gap	0.8 - 0.9 mm (0.03 - 0.04 in)	
Idle speed	1,500 ± 100 rpm	
Recommended engine oil	Honda 4-stroke motorcycle oil API Service Classification SG or higher, excluding oils marked as “Energy Conserving” or “Resource Conserving,” SAE 10W-30, JASO T 903 standard MA	

*1 : EU regulation

Engine oil capacity	After draining	0.85 L (0.90 US qt, 0.75 Imp qt)
	After draining & engine oil filter change	0.90 L (0.95 US qt, 0.79 Imp qt)
	After disassembly	1.0 L (1.1 US qt, 0.9 Imp qt)
Recommended brake fluid	Honda DOT 3 or DOT 4 Brake Fluid	
Recommended drive chain lubricant	Drive chain lubricant designed specifically for O-ring chains. If not available, use SAE 80 or 90 gear oil.	
Drive chain slack	20 - 30 mm (0.8 - 1.2 in)	
Standard drive chain	DID 428VIX3	
	No. of links	118
Standard sprocket size	Drive sprocket	14T
	Driven sprocket	41T

■ Bulbs

Headlight	LED
Brakelight/Taillight	12 V-21/5 W
Front turn signal/Position light	12 V-21/5 W ×2
Rear turn signal	12 V-21 W ×2
License plate light	12 V-5 W

■ Fuses

Main fuse	20 A
Other fuse	7.5 A

■ Torque Specifications

Front/Rear turn signal screw	1 N·m (0.1 kgf·m, 0.7 lbf·ft)
License plate light cover screw	1 N·m (0.1 kgf·m, 0.7 lbf·ft)

Index

A

Accessories 14

B

Battery 50, 59
Brakelight Switch 69
Brakes
- Fluid 54, 64
- Freeplay 66
- Pad Wear 65
- Shoe Wear 68

Braking 11
Bulb
- Brakelight/Taillight 82
- Front Turn Signal 82
- License Plate Light 83
- Rear Turn Signal 82

C

Clock 21, 29
Clutch
- Freeplay 72

Crash 4

D

Display Setting 27
Drive Chain 54, 71

E

Electrical Trouble 81
Engine
- Number 94
- Oil 53, 62
- Starting 37
- Stop Switch 34, 37, 87
- Stopping 87
- Will Not Start 77

Environment 93
Equipment
- Helmet Holder 42
- Owner's Manual 41, 87
- Tool Kit 41, 58

F

Flooded Engine 37
Frame Number 94

Fuel
Average Fuel Mileage Meter 24
Current Fuel Mileage Meter 23
Gauge 21
Recommended 40
Remaining 21
Tank Capacity 40
Fuels Containing Alcohol 95
Fuses 52, 84

G
Gasohol 95
Gear Position Indicator 21

H
Headlight Dimmer Switch 34
Helmet Holder 42
High Beam Indicator 32
Horn Button 34

I
Ignition Cut-off System
Banking Sensor 87
Side Stand 70
Ignition Key 86
Ignition Switch 35, 37, 87
Image Labels 6
Indicators 32
Instruments 20
Instruments, Controls, & Other Features 87

L
Labels 6
Load Limits 15
Loading Guidelines 15

M
Maintenance
Fundamentals 48
Importance 44
Safety 44
Schedule 45
Maximum Weight Limit 15
Modifications 14

N
Neutral Indicator 32

O
Odometer 23, 87
Oil
Engine 53, 62

P
Parking 12
Parts Location 18
Passing Light Control Switch 34
Petrol 40, 95
PGM-FI (Programmed Fuel Injection) Malfunction Indicator Lamp (MIL) 33, 78
Protective Apparel 10

R
Rear Suspension 75
Recommended
Engine Oil 53
Fuel 40
Refuelling 40
Removal
Battery 59
Seat 60
Side Cover 61
Repair Kit 80
Riding Precautions 11

S
Safety Guidelines 3
Safety Precautions 10
SEL Button 20
Serial Numbers 94
Service Diagnostic Recorders 86
SERVICE DUE Indicator 25
SET Button 20
Shifting Gears 39
Side Stand 70
Side Stand Ignition Cut-off System 70
Specifications 97
Speedometer 21
Start Button 34, 37
Starting the Engine 37
Stopping Engine 87
Storage
Equipment 41
Helmet Holder 41, 42
Owner's Manual 41, 87
Tool Kit 41, 58

Storing 91
Switches 34

T
Throttle 74
Tool 41, 58
Transporting 92
Tripmeter 23, 87
Troubleshooting 76
Turn Signal Indicator 32
Tyres
Air Pressure 56
Puncture 80
Replacing 56, 80

W
Washing 88
Weight Limit 15